MINI SPLIT
REPLACEMENT PARTS GUIDE

FACTORY CODE: 22022016016744

BZ33-HP24OUT2-G2-C

ID# .3548012

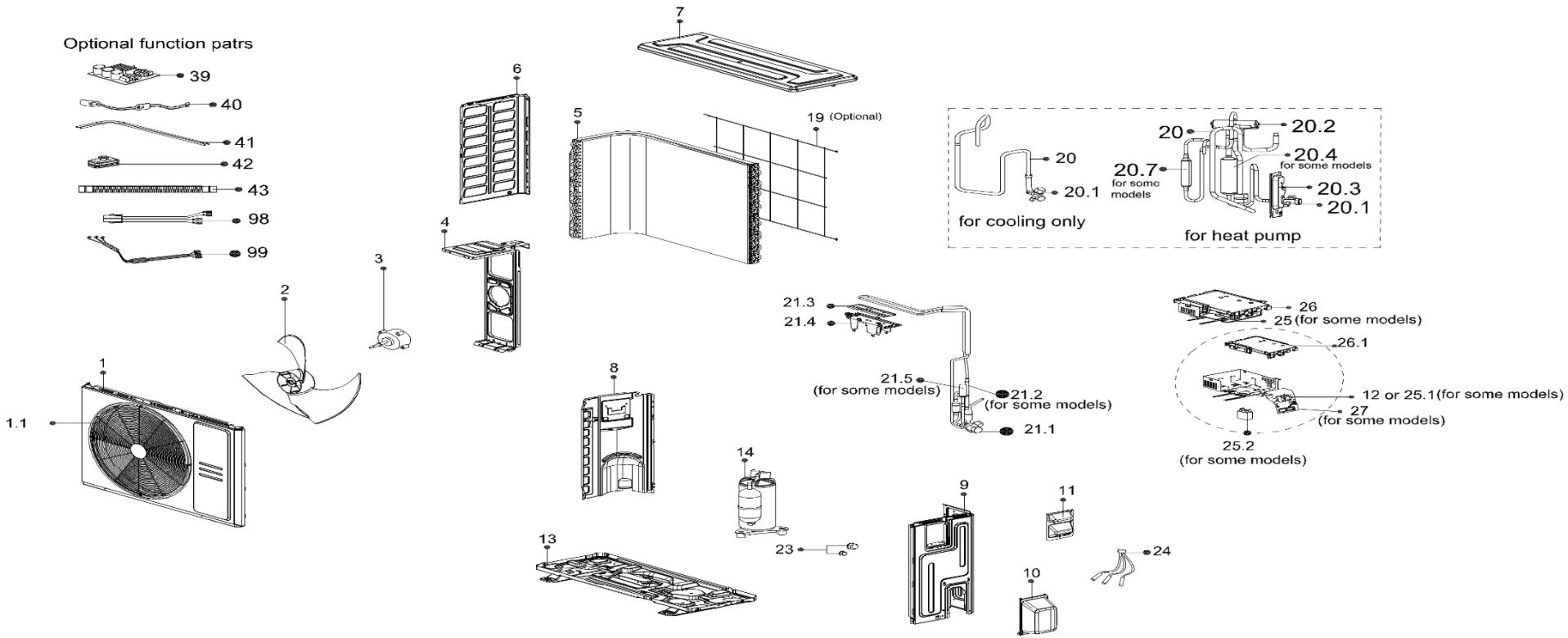

COMFORT SERIES

breeze33®

MINI SPLIT
REPLACEMENT PARTS GUIDE

BZ33-HP24OUT2-G2-C

ID# .3548012

Part #	Replacement Part	Part Name	Qty
1	12222000A06282	Front panel assembly	1
1.1	12222000A06283	Front panel	1
2	12100105000841	Axial flow fan	1
3	11002015000366	Brushless DC motor	1
4	12222000012371	Supporter of fan motor	1
5	15822000009836	Condenser assembly	1
6	12222000013472	Left supporter	1
7	12222000013465	Top cover assembly	1
8	12222000013245	Partition board assembly	1
9	12222000013466	Right clapboard assembly	1
10	12122000007150	Water collector	1
11	12222000010966	Big handle assembly	1
12	17400401000068	Terminal	1
13	12222000014054	Chassis assembly	1
14	11103020006879	DC inverter rotary compressor	1
19	12222000013085	Rear net	1
20	15422000018832	4-Way valve assembly	1
20.1	15500204000502	Gas valve	1
20.2	15500216000026	4-Way valve	1

Part #	Replacement Part	Part Name	Qty
20.3	12222200005738	Valve plate	1
20.4	15122000027161	Muffler subassembly	1
20.7	15122000027116	Muffler subassembly	1
21	15422000018052	Liquid valve assembly	1
21.1	15500208000286	Liquid valve	1
21.2	15500210000768	Throttle valve element	1
21.2	15500210000061	Throttle valve	1
21.3	11203803001176	Radiator	1
21.4	12122000011478	U-typed support with copper pipe	1
23	15500406000003	Copper nut	1
23	15500406000010	Copper nut	1
24	11201011000188	Combination sensor	1
25	17222000031639	Terminal board subassembly	1
26	17222000037718	Electronic control box subassembly	1
26.1	12122000008999	Electronic installing box	1
40	17402001000603	Crankcase electric heating strip	1
41	17402002000544	Tube type electric heater	1
99	17401203012697	Compressor wire subassembly	1